LED Recessed Downlight

TIS RPL150/STEP DIM

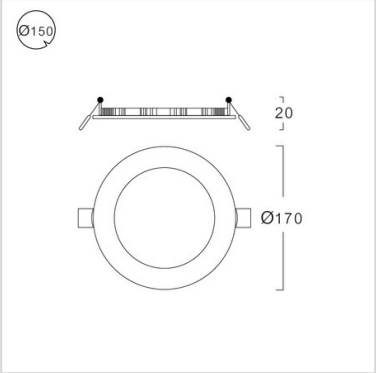

Application

Recessed downlight is designed to use for office buildings,shopping centers,convenience stores, modern trade stores,discount stores,hotels, resturants,residences,recreation centers, museums,etc.

Specification

Housing	High quality aluminium
Finishing	Powder coated in white
Diffuser	Opal
Mounting	Recessed
Power	12W
Source	LED MODULE
Lamp Colour	3000/6000K
Lamp Output	1080 lm
Control Gear	Separate driver
Power Supply	220VAC 50Hz
IP Rating	20
Luminaire Lifetime	30,000 hrs.
Equivalent	CFL 18-23W
Remarks	Step dim (3 light levels) 100%-50%-15%

Ordering Data

Model	Watt
RPL150/W-12LED/3K/STEP DIM	12W
RPL150/W-12LED/6K/STEP DIM	12W

Related Products