LED Lamp

LED-MR16

Application

This lamp is designed to replace
MR16 halogen lamp for energy saving,
long life time and low maintenance cost

Specification

Housing	Plastic with inside aluminium
Description	Non-dimmable
	Do not use in enclosed fixture
Body Colour	White
Power	6W
Source	LED-SMD
Lamp Colour	2700/3000/4000/6500K - CRI 80
Lamp Output	550 lm
Beam Angle	36/60/110 degree
Control Gear	Separated transformer
Power Supply	12V AC/DC
LED Lifetime	15,000 hrs.
Equivalent	MR16 35/50W

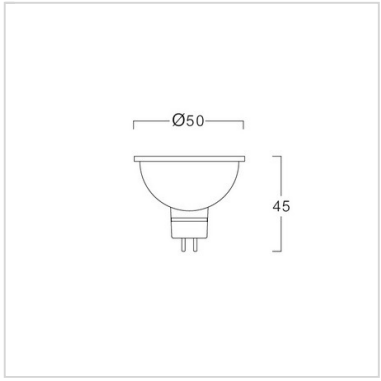

Ordering Data

Model	Watt
L&E#LED-MR16-550LM/827/6W/GU5.3/36D	6W
L&E#LED-MR16-550LM/830/6W/GU5.3/110D	6W
L&E#LED-MR16-550LM/830/6W/GU5.3/36D	6W
L&E#LED-MR16-550LM/830/6W/GU5.3/60D	6W
L&E#LED-MR16-550LM/840/6W/GU5.3/36D	6W
L&E#LED-MR16-550LM/840/6W/GU5.3/60D	6W
L&E#LED-MR16-550LM/865/6W/GU5.3/36D	6W

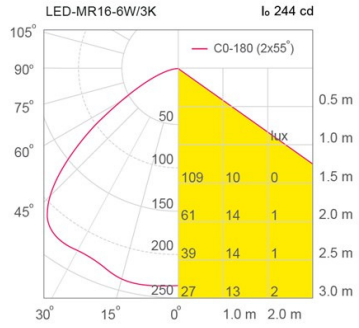

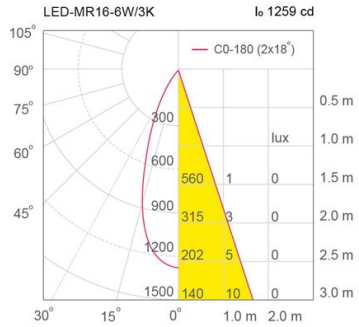

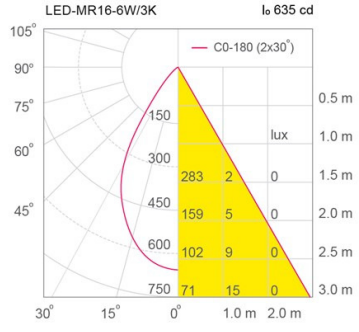

Related Products

Recessed Downlight

Track Light

Surface Downlight