LED Spot / Tracklight

TRM86

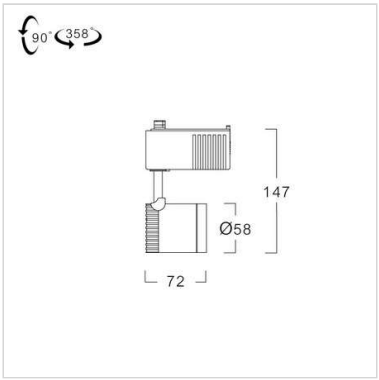

Application

Track light is designed to use for office buildings,shopping centers,convenience stores,modern trade stores,discount stores,hotels,resturants,residences, museums,recreational centers,etc.

Specification

Housing	Die-cast aluminium
Finishing	Powder Coated in white or balck
Mounting	1 circuit lighting track (LTS01/LTR01))
Power	4-8W
Light Source	LED-MR16
Lamp Holder	GX5.3
Colour Temperature	2700-6500K
Lamp Output	6W : 2700/3000/4000/6500K : 550 lm
	7W : 2700K : 550 lm
	7W : 3000K : 600 lm
Control Gear	Built-in electronic transformer
Power Supply	220-240VAC,50Hz
Power Factor	>0.9
Insulation Class	II
IP Rating	20
LED Lifetime	6W : 15,000 hrs.
	7W : 25,000 hrs.
Equivalent	MR16 35 - 50W

Ordering Data

Model	Watt
TRM86/BK-XXLED-MR16	4-8W
TRM86/WH-XXLED-MR16	4-8W

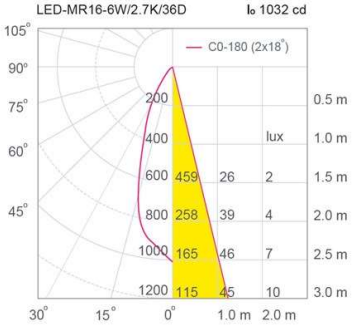

Related Products

TRM86/BK

SAM86-LED MR16